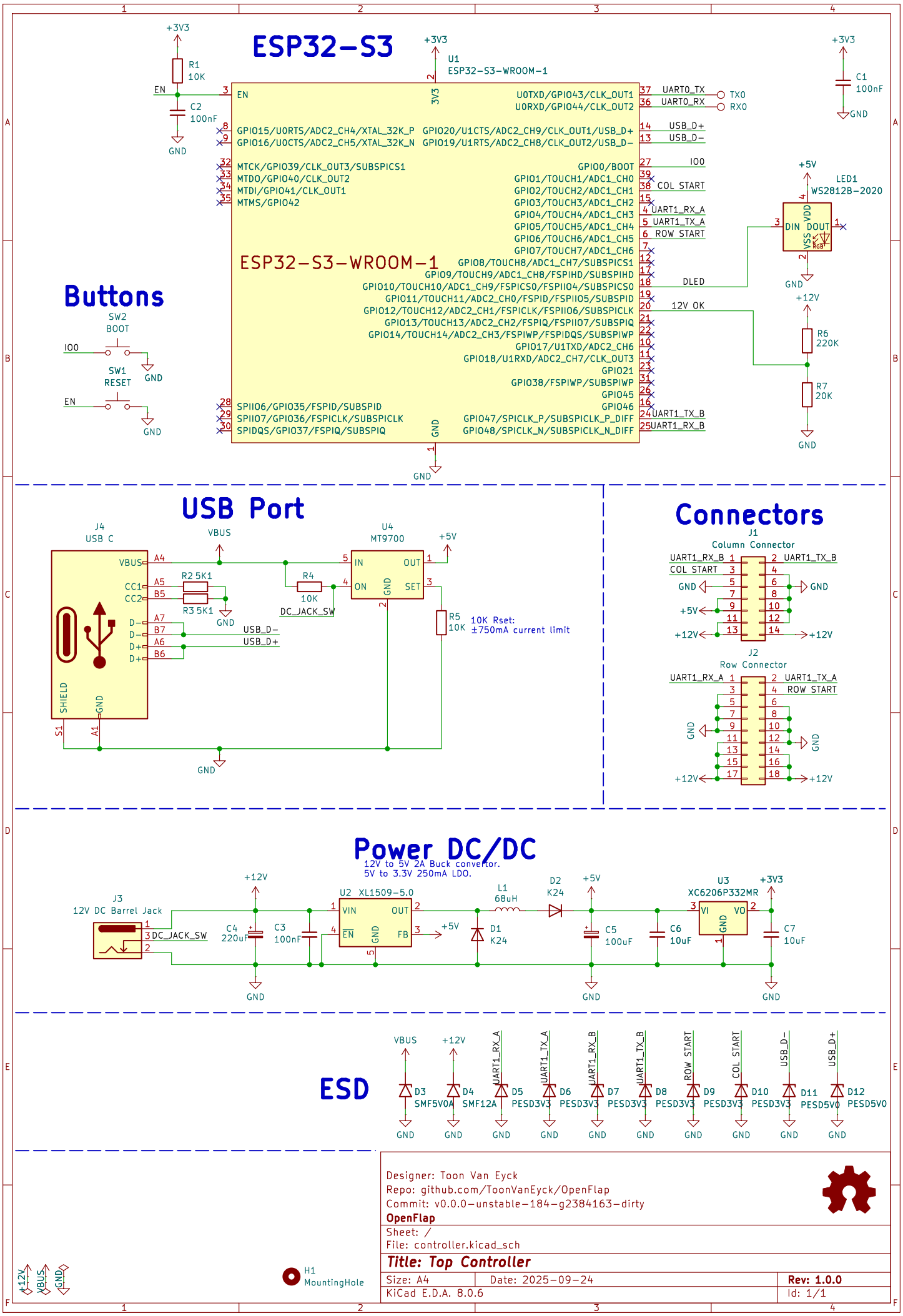
ESP32-S3
U1
ESP32-S3-WROOM-1
ESP32-S3-WROOM-1
+3V3
R1
10K
EN
C2
100nF
GND
C1
100nF
EN
3V3
U0TXD/GPIO43/CLK_OUT1
U0RXD/GPIO44/CLK_OUT2
UART0_TX
UART0_RX
TX0
RX0
GPIO15/U0RTS/ADC2_CH4/XTAL_32K_P
GPIO16/U0CTS/ADC2_CH5/XTAL_32K_N
GPIO20/U1CTS/ADC2_CH9/CLK_OUT1/USB_D+
GPIO19/U1RTS/ADC2_CH8/CLK_OUT2/USB_D-
USB_D+
USB_D-
MTCK/GPIO39/CLK_OUT3/SUBSPICS1
MTDO/GPIO40/CLK_OUT2
MTDI/GPIO41/CLK_OUT1
MTMS/GPIO42
GPIO0/BOOT
IO0
GPIO1/TOUCH1/ADC1_CH0
GPIO2/TOUCH2/ADC1_CH1
GPIO3/TOUCH3/ADC1_CH2
GPIO4/TOUCH4/ADC1_CH3
GPIO5/TOUCH5/ADC1_CH4
GPIO6/TOUCH6/ADC1_CH5
GPIO7/TOUCH7/ADC1_CH6
COL START
UART1_RX_A
UART1_TX_A
ROW START
GPIO8/TOUCH8/ADC1_CH7/SUBSPICS1
GPIO9/TOUCH9/ADC1_CH8/FSPIHD/SUBSPIHD
GPIO10/TOUCH10/ADC1_CH9/FSPICS0/FSPII04/SUBSPICS0
GPIO11/TOUCH11/ADC2_CH0/FSPID/FSPII05/SUBSPID
GPIO12/TOUCH12/ADC2_CH1/FSPICLK/FSPII06/SUBSPICLK
GPIO13/TOUCH13/ADC2_CH2/FSPIQ/FSPII07/SUBSPIQ
GPIO14/TOUCH14/ADC2_CH3/FSPIWP/FSPIDQS/SUBSPIWP
GPIO17/U1TXD/ADC2_CH6
GPIO18/U1RXD/ADC2_CH7/CLK_OUT3
GPIO21
GPIO38/FSPIWP/SUBSPIWP
GPIO45
GPIO46
DLED
12V OK
SPII06/GPIO35/FSPID/SUBSPID
SPII07/GPIO36/FSPICLK/SUBSPICLK
SPIDQS/GPIO37/FSPIQ/SUBSPIQ
GPIO47/SPICLK_P/SUBSPICLK_P_DIFF
GPIO48/SPICLK_N/SUBSPICLK_N_DIFF
UART1_TX_B
UART1_RX_B
GND
+5V
LED1
WS2812B-2020
VDD
DIN
DOUT
VSS
RGB
+12V
R6
220K
R7
20K
Buttons
SW2
BOOT
IO0
SW1
RESET
EN
USB Port
J4
USB C
VBUS
CC1
CC2
D-
D-
D+
D+
SHIELD
GND
S1
A1
A4
A5
B5
A7
B7
A6
B6
R2 5K1
R3 5K1
USB_D-
USB_D+
U4
MT9700
IN
OUT
ON
GND
SET
R4
10K
DC_JACK_SW
R5
10K
10K Rset:
±750mA current limit
Connectors
J1
Column Connector
UART1_RX_B
COL START
UART1_TX_B
J2
Row Connector
UART1_RX_A
UART1_TX_A
ROW START
Power DC/DC
12V to 5V 2A Buck convertor.
5V to 3.3V 250mA LDO.
J3
12V DC Barrel Jack
DC_JACK_SW
C4
220uF
C3
100nF
U2 XL1509-5.0
VIN
OUT
EN
GND
FB
L1
68uH
D1
K24
D2
K24
C5
100uF
C6
10uF
U3
XC6206P332MR
VI
VO
GND
C7
10uF
ESD
D3
SMF5V0A
D4
SMF12A
D5
PESD3V3
D6
PESD3V3
D7
PESD3V3
D8
PESD3V3
D9
PESD3V3
D10
PESD3V3
D11
PESD5V0
D12
PESD5V0
H1
MountingHole
Designer: Toon Van Eyck
Repo: github.com/ToonVanEyck/OpenFlap
Commit: v0.0.0-unstable-184-g2384163-dirty
OpenFlap
Sheet: /
File: controller.kicad_sch
Title: Top Controller
Size: A4
Date: 2025-09-24
Rev: 1.0.0
KiCad E.D.A. 8.0.6
Id: 1/1